ARTICLE CODE	DESCRIPTION
ZIP-9111	Turnbuckle m10 with threaded rod m10 - and closed eye - 95/125/260mm

BRAND

Zip Clip

PRODUCT DESCRIPTION

M10 turnbuckle with closed eye and threaded rod M10
Total length: 95/125/260 mm

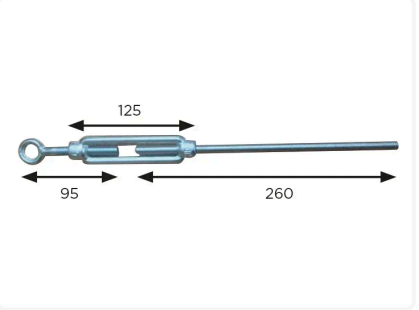

SPECIFICATIONS

Net weight (kg)	0.3
Color	Undefined

TECHNICAL DETAILS

ETIM	EC011590
MOQ sales (Pc.)	1