ARTICLE CODE	DESCRIPTION
VCG-1200	Ss slider length 1178 mm - for cabinet depth 1200mm

BRAND

Linum

PRODUCT DESCRIPTION

SS 18/10 - AISI 304
For coolers and bakery cabinets
Width: 45 mm - Height: 25 mm - Thickness SS: 1,2 mm

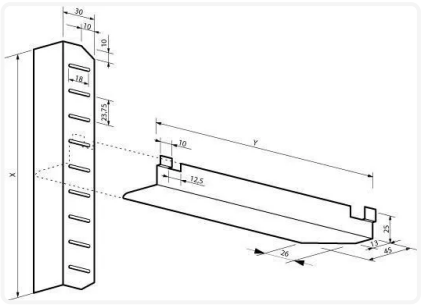

SPECIFICATIONS

Net weight (kg)	0.145
Color	Undefined

TECHNICAL DETAILS

ETIM	EC000386
MOQ sales (Pc.)	1